Innovation since 1935

PRODUCT TECHNICAL SHEET

Collection :	DEVILLE	Ref. :	**1955.--.28**

Batterie de cuisine 4 trous, douchette poussoir à inverseur automatique et grand bec mobile 235mm

4-gats keukenmengkraan, handdouche met drukknop, automatische omschakelaar en grote draaibare uitloop 235mm

4-hole kitchen mixer, handshower with pusher, automatic diverter and great swivel spout 235mm

Picture

Product details

Flow at 3 bar :	Restricted 9 l/min 4,5 l/min (Handshower)
Internal mechanism :	Ceramic valve 1/4 turn
Diverter :	Automatic pressure diverter
Note :	Handshower hose 1,5m

Technical drawing

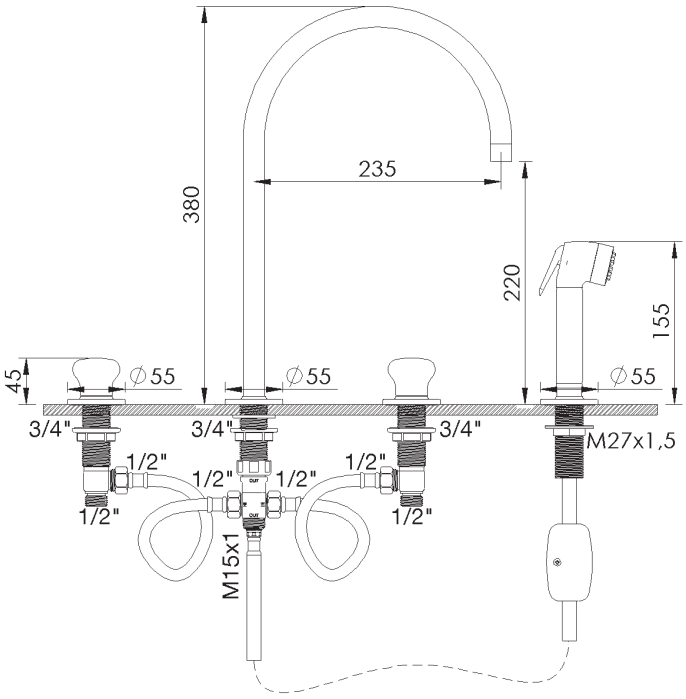

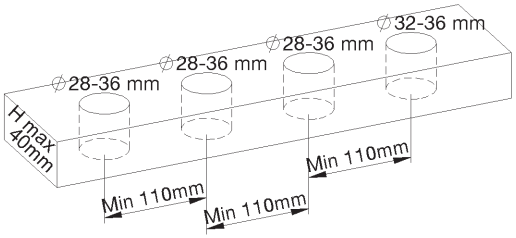

RB2.V02